Ex No:
4/2/2

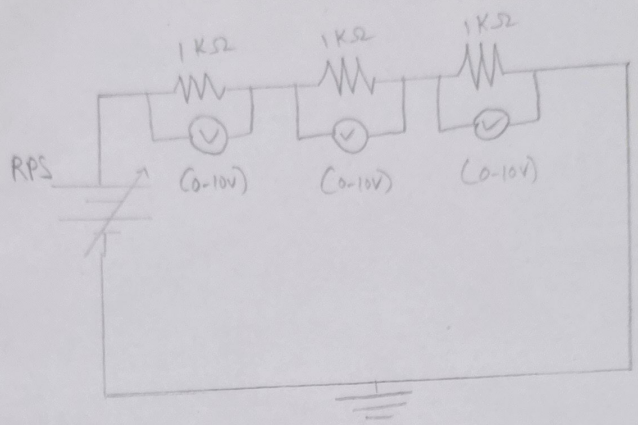

KVL

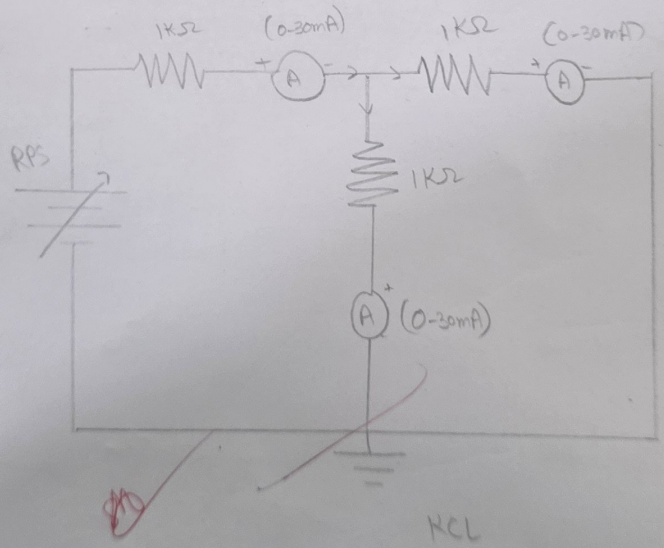

KCL

Ex No: 4
4/2/26

VERIFICATION OF KIRCHOFF'S LAW

Aim:

To verify Kirchoff's voltage law and Kirchoff's current law both theoretically and practically for a given DC circuit

Apparatus required:

S No	Apparatus	Specification	Quantity
1.	Regulated power supply	(0-30)V	1
2.	Voltmeter	(0-30)V MC	3
3.	Ammeter	(0-10)mA MC	3
4.	Resistor	1KΩ	3
5.	Bread Board	–	1

Procedure:

* Give connection as per the circuit diagram
* Switch ON the supply vary the RPS (regulated power supply) and set a particular input voltage
* Note down the readings of ammeter and voltmeter and tabulate them
* Vary the RPS to its minimum value and switch OFF the supply
* Using the tabulated values verify the Kirchoff's law partially and verify it theoritically.

V (volts)	V_1 (volts)	V_2 (volts)	V_3 (volts)	$V = V_1 + V_2 + V_3$ (volts)	I (AMP)	I_1 (AMP)	I_2 (AMP)	$I = I_1 + I_2$ (AMP)
2	0.61	0.61	0.61	1.83	0.57	0.58	0.57	1.15
6	1.97	1.97	1.97	5.91	1.67	1.68	1.67	3.35
9	2.89	2.89	2.89	8.68	2.49	2.52	2.49	5.01

Calculation:

$V = V_1 + V_2 + V_3$

$= 0.61 + 0.61 + 0.61 = 1.83$

$V = V_1 + V_2 + V_3$

$= 1.97 + 1.97 + 1.97 = 5.91$

$V = V_1 + V_2 + V_3$

$= 2.89 + 2.89 + 2.89 = 8.68$

At $I = 0$,

$I = I_1 + I_2$

$= 0.57 + 0.58 = 1.15$

$I = I_1 + I_2$

$= 1.67 + 1.68 = 3.35$

$I = I_1 + I_2$

$= 2.49 + 2.52 = 5.01$

Marks split-up:

S.No	Description	Marks allowed	Marks Obtained
1.	Experimental Setup / connection	20 Marks	20
2.	Observation Readings	20 Marks	20
3.	Calculation/ results	20 Marks	10
4.	Viva	20 marks	10
5.	Record	20 Marks	10
		Total	80

80

~~80~~ 23/3/26

Result:

This Kirchoff's current law and voltage law are verified theoretically and practically